TOTO

Specification Sheet

TX471KEA

Single Lever Bath & Shower Set

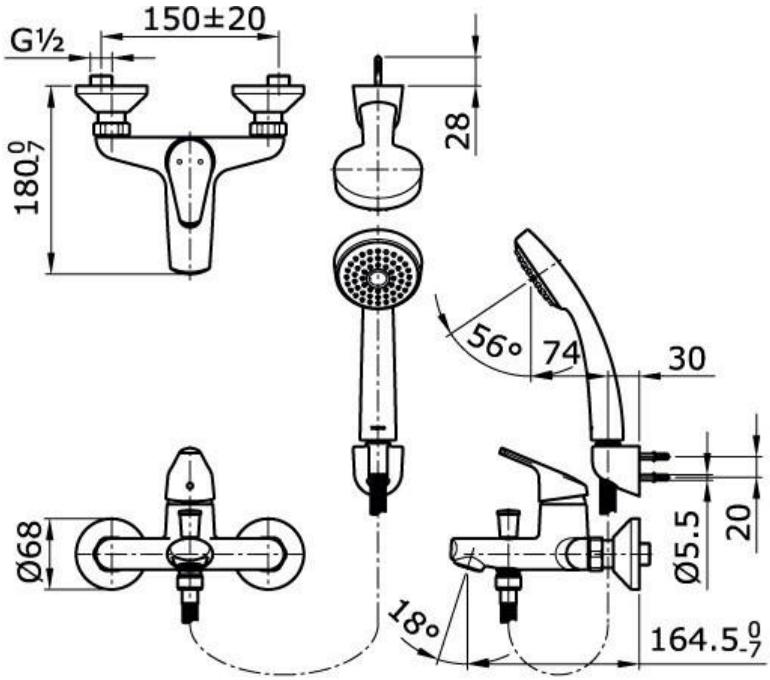

Some products may not be available in your area.
Prices indicated are manufacturer's suggested retail price, prices may change anytime without notice.
Please check with your nearest reseller for updated prices.
Prices shown for lavatory does not include faucet.